ocpCustomerCare@ocpw.ocgov.com | www.ocplanning.net
300 N. Flower Street
Santa Ana, CA 92703
714.667.8888
714.667.8885

ON-SITE SEWAGE ABSORPTION SYSTEM GUIDELINES

The purpose of these guidelines is to provide a uniform approach to the percolation testing requirements and design criteria of an on-site sewage absorption system so as to reasonably expect the system to function in a safe and sanitary manner. An on-site sewage absorption system consists of either a trench leach field or a seepage pit. The use of these systems is considered temporary until such time as a public sanitary sewer becomes available.

The Orange County Public Works Department (OCPW) is responsible for the review and approval of all percolation tests for on-site sewage systems, as well as plans for their design. OC Public Works' approval of proposed on-site sewage systems may be either a requirement for recordation of a parcel/tract map or a requirement before building/structural permits are issued. For approval of an on-site sewage system, not only must the percolation tests be performed in accordance with the procedures but the system must be designed as provided herein.

I. Building/Structural Permit

Percolation tests and plans illustrating the designed on-site sewage may be necessary in order to obtain a building and/or plumbing permit for an existing legal building site, remodeling a home, or renovating a failed system. The intent is to assure that the system is designed and can be constructed in accordance with County requirements.

II. Recordation of a Tract or Parcel Map

Percolation tests and plans illustrating the designed on-site sewage system may also be a recordation requirement of a tentative map. In this instance, it is not normally necessary to site a dwelling on each lot; but rather demonstrate that there is sufficient area with suitable percolation, physiographic and geologic characteristics to be able to construct an absorption system to serve a three to four bedroom house. Consideration should be given to conditions expected after grading. At least three to four passing tests are required in an area where a trench leach field system can be designed and/or one passing test for seepage pits.

III. Preparation of the Report/Plan

All percolation tests, reports and plans shall be under the supervision of a Registered Environmental Health Specialist (Sanitarian), Registered Civil Engineer, Registered Geologists, or Engineering Geologist. Orange County Public Works' offices are located at 300 North Flower, Santa Ana, CA 92702. Public hours are 7:30 a.m. to 5:00 p.m., Monday through Friday, except holidays.

IV. Submittal of Reports and Plans

Four (4) copies of the engineer's soil percolation reports are to be submitted to the Plumbing Plan Check section, OC Public Works. All reports must include a log of all soil borings and percolation tests as well as plans showing a designated system.

Reports and plans submitted to obtain Building Permits must include:

- Depth to groundwater
- Depth to any impervious layers
- Acceptable result of six percolation tests distributed throughout an area set aside for trench leach fields and/or at least one passing percolation for seepage pits for the proposed dwelling
- Distance between trenches or seepage pits
- Location of property lines
- Drainage courses
- Soils characteristics
- Trench width or pit diameter
- Pit depth or depth of gravel below pipe
- Topographic lines, if steep slopes exist
- Footprint of house
- Outline of septic tank and distribution box
- The plan must reflect all conditions after precise grading, including items listed in Table 4, page 10.

Reports and plans submitted for recordation of a map must include:

- Acceptable results of three to four percolation tests for a trench leach field and one passing test for a seepage pit
- Soils characteristics
- Size of proposed lots
- Slopes, topographical lines
- Drainage courses
- Depth of groundwater
- Depth of impervious layer
- Required set backs
- Any pertinent constraints

V. Percolation Tests for Trench Leach Fields and Seepage Pits

Percolation rates must be figured on the basis of the test data obtained after the soil has had the opportunity to be saturated with clear water. After the test hole has been bored it must be kept filled for at least four hours and preferably overnight. Tests are to be conducted the following day to allow the soil to swell for at least 24 hours, thereby approaching the conditions during the wettest season of the year.

In no instance shall percolation tests be conducted in a graded “fill area”.

In the case of either a trench leach field or seepage pit, at least one exploratory boring is required per system in order to determine depth to groundwater and any impervious layer. The boring must extend at least five feet below the proposed trench bottom and ten feet below the pit bottom. Further, the soil profiles in each of the exploratory borings are to be recorded. Groundwater is defined as zones of saturation, which include perched water tables, shallow regional groundwater tables or aquifers, or zones that are seasonally, periodically, or permanently saturated. Zones of seasonal or periodic soil saturation shall be estimated at the highest level of redoximorphic features, such as soil mottles or low-chroma colors (except soils with rapid permeability). Test holes and exploratory borings shall be back-filled and properly compacted after tests are done.

Unless otherwise waived by the Building Official, both trench leach fields and seepage pit effective sidewall shall be increased by an amount equal to 100% of the original design capacity. This is to assure a “backup” system is available at the time of initial construction. Separate the backup system from the primary system with a diverter valve, (see pages 12 & 13).

VI. Trench Leach Field Test Procedures

A. Tests shall be made in separate test holes spaced uniformly over the proposed absorption field site.

B. Holes are to be dug or bored with a diameter of 8-12 inches. The bottom of the test hole shall be located at the same depth as the bottom of the proposed leaching field.

C. The bottom and sides of the hole are to be roughened or scored with a knife blade or putty knife in order to remove any smeared soil surfaces and to provide a natural soil interface into which water may percolate. All loose material is to be removed from the hole. Two inches of coarse sand and fine gravel are to be added to protect the bottom from scouring.

D. Each test hole is to be presaturated with clear water as noted above.

E. After the 24 hour presaturated period each hole is to be carefully filled with clear water to a level approximately six inches over the gravel.

F. From a fixed reference point, the drop in water level is to be measured at approximately 30 minute intervals for six hours, refilling to six inches over the gravel as necessary. The slowest drop of all tests that occurs during the final 30 minute period is used to calculate the percolation rate. The drops during prior periods provide information for possible modification of the procedure to suit local circumstances.

G. In sandy soils in which two consecutive measurements show that six inches of water seeps away in less than 25 minutes, the test may be run for an hour with measurements taken every ten minutes. The drop that occurs during the final ten minutes should be used to calculate the percolation rate. Field data must show the two-25 minute readings, along with the six-10 minute readings.

H. The minimum acceptable percolation rate for a trench leach field is 60 min./in. The maximum rate shall not exceed 4 min./in.

VII. Trench Leach Field Design Standards

Disposal Field shall be constructed as follows:

1.	Minimum Number of Drain Lines Per Field	1
2.	Maximum Length of Each Line	100 ft.
3.	Minimum Bottom Width of Trench	18 in.
4.	Maximum Bottom Width of Trench	36 in.
5.	Minimum Spacing of 18" Width Lines Center to Center	6 ft.
6.	Minimum Spacing of 36" Width Lines Center to Center	8 ft.
7.	Minimum Depth of Cover of Lines	12 in.
8.	Preferred Depth of Cover of Lines	18 in.
9.	Minimum Filter Material Over Drain Lines	2 in.
10.	Minimum Separation Between Bottom of Leach Line and Seasonally High Groundwater	5 ft.
11.	Leach Lines are not to be Installed Under Driveways, Paved or Unpaved, or in Horse Corrals	
12.	Perforated Pipe Shall be Laid Level and with the End of the Line Capped.	
13.	Any portion of the disposal field located to the top of a cut or on sloping ground shall maintain a 15 foot horizontal distance from day light to any portion of the leach line or leach bed. Table 1 gives the minimum cover allowed versus the percent of slope in the area of the disposal field to meet the 15 foot requirement. This table also gives a factor by which to increase the square foot of bottom area due to the loss in evaportranspiration caused by the added cover required.	See Table 1

TABLE 1

Slope of natural ground in area of disposed system	Minimum cover over filter material (ft.)	Minimum Depth of Test Req. * (ft.)	Overburden factor **
5%	1.0'	3.0'	1.0
10%	1.5'	3.5'	1.0
15%	2.25'	4.25'	1.0
20%	3.0'	5.0'	1.0
25%	3.75'	5.75'	1.1
30%	4.5'	6.5'	1.2
35%	5.25'	7.25'	1.3
40%	6.0'	8.0'	1.4
45%***	7.0'	9.0'	1.5

* Assuming standard trench (see Table 2). To be adjusted for greater than 12” gravel below pipe.

** Overburden factor for leaching line where overburden is not removed to allow for minimum cover.

*** No system shall be installed with a slope greater than 45 % (equivalent to 2:1 slope where 100% is equivalent to 1:1 slope)

Tables 2 and 3 below are used to calculate the linear feet required for a trench leach line. Table 2 lists the required linear feet of standard trench for a given percolation rate.

TABLE 2

(Provides for garbage disposal and automatic clothes washing machines)

Percolation rate (time required for water to fall one inch, in minutes)	Required absorption area, in sq. ft. per bedroom based on a standard trench*
4 min./in.	115 sq. ft.
5 min./in.	125 sq. ft.
10 min./in.	165 sq. ft.
15 min./in.	190 sq. ft.
30 min./in.	250 sq. ft.
45 min./in.	300 sq. ft.
60 min./in.	330 sq. ft.

* A standard trench is one in which the filter material extends 2 inches above and 12 inches below a 4 inch perforated drain line.

In cases where the depth of filter material below the drain line exceeds the standard 12 inch depth, credit may be given for the added absorption area provided in deeper trenches with a resultant decrease in length of trench. Such credit shall be given in accordance with Table 3 which gives the percentage of length of standard absorption trench (as computed from Table 2), based on six inch increments of increase in depth of filter material.

TABLE 3

PERCENTAGE: DEPTH VS. WIDTH

Depth of Gravel below Pipe in inches	Trench width 12"	Trench width 18"	Trench width 24"	Trench width 36"
12"	75%	78%	80%	83%
18"	60%	64%	66%	71%
24"	50%	54%	57%	62%
30"	43%	47%	50%	55%
36"	37%	41%	44%	50%

The following formula is used to determine the length of the line required.

$\frac{(AxB)}{W}$ x C x D = length of line (then multiply by 2 to equal 100% of the original design capacity)

Where: A = absorption area (from Table 2)
B = the number of bedrooms
W = the proposed width of the trench in feet
C = percentage of standard trench (from Table 3)
D = overburden factor (from Table 1)

Note: It must be stressed that the proposed maximum depth of the trench disposal system must not exceed the depth of the percolation test. For example, tests must be performed at 54 inches to utilize 36 inches of filter material below the pipe.

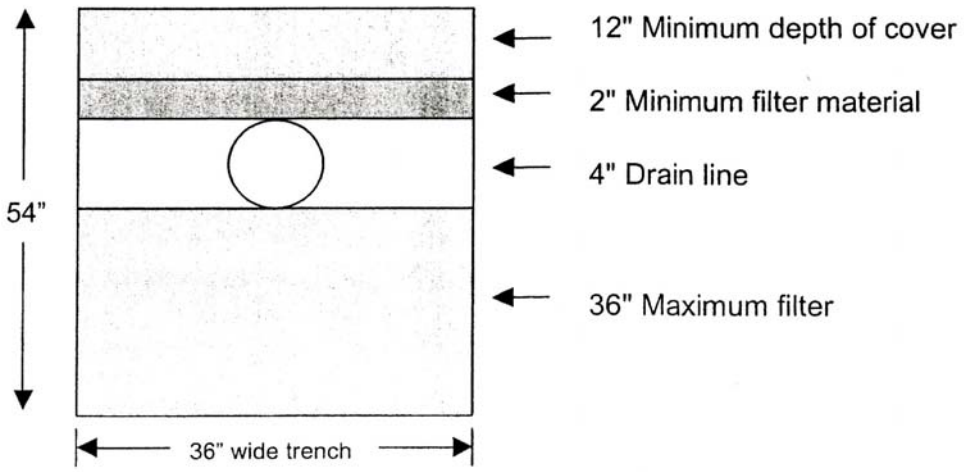

VIII. Seepage Pits Percolation Test Procedures

A. Six to eight inch diameter holes only are accepted for percolation testing.

B. The holes are to be drilled and tested to the depth of the proposed pit, prepared and presaturated as noted in Section V above. Minimum of 12 foot separation is required between percolation test hole and ground water test boring.

C. The percolation rate measurement shall be made on the day following the presoak.

D. The water depth is to be adjusted to the proposed seepage pit inlet depth; usually four feet below the natural grade.

E. From a fixed reference point, the drop in water level is to be measure over a 30 minute period for at least five hours; refilling after every reading.

F. The last or the sixth hour, the hole should not be refilled; but the drop in the water level is to be read every ½ hour. The drop that occurs during the final 30 minute period is used to calculate the percolation rate.

G. The total depth of the hole must also be taken at every reading to determine if caving has occurred.

H. In sandy soils where the water on two consecutive readings seeps away faster than half the wetted depth in 25 minutes or less, after a two hour presoak the test may then be taken at ten minute intervals and run for one hour. The last ten minute reading shall be the design rate.

I. Seepage pit percolation rates shall be calculated by the equation.

$$Q = \frac{\frac{F}{T} \times D \times 9}{L_{(AVG.)}}$$

where:

Q = rate in gallon/sq. ft. of side wall per day

F = drop during time interval (ft)

D = boring diameter (ft)

T = time interval (hr)

L = average wetted depth (ft)

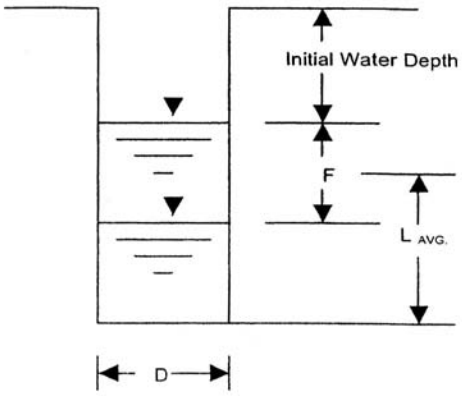

J. The minimum acceptable percolation rate for seepage pits is a Q equal to 1.1 the maximum rate shall not exceed 3.0 gal/sq.ft./day.

K. The amount of effective side wall below pit inlet is as follows:

a. For a five foot diameter pit

$$\text{Depth of seepage pit below inlet} = \frac{\text{Septic Tank Capacity} \times 2^*}{Q \times 15.7}$$

b. For a six foot diameter pit

$$\text{Depth of seepage pit below inlet} = \frac{\text{Septic Tank Capacity} \times 2^*}{Q \times 18.8}$$

Q = percolation rate in gal./sq.ft./day

*100% of the original design capacity

IX. Seepage Pit Design

A. Seepage pit should be constructed as follows:

a. Each seepage pit shall be circular in shape and shall have an excavated, diameter of not less then five feet. Each such pit shall be lined with whole new hard burned clay brick, concrete brick, concrete circular type cesspool blocks or other materials approved by OC Public Works. Approval from OC Public Works shall be obtained prior to construction for any pit having an excavated diameter greater than six (6) feet.

b. Each seepage pit shall have a minimum sidewall (not including the arch) of (10) feet below the inlet with a maximum total depth of 40 feet unless approved by the Building Official.

c. The top of the arch, or cover, must be at least eighteen (18) inches but no more than four (4) feet below the surface of the ground.

d. The horizontal distance from a seepage pit to the top of a cut bank shall be equal to five times the vertical height of the bank or 25 feet, which ever is less.

e. Maintain a ten-foot separation between bottom of the pit and seasonally high groundwater.

f. A 10-foot separation is required between the pit bottom and an impervious layer (e.g., bedrock or any layer where the percolation rate is greater than 20 min./in.).

X. Septic Tank Design

A. Capacity of septic tank shall be per California Plumbing Code, currently adopted edition (see page 9).

Residential septic tank size is based on the number of bedrooms served. For design purposes, a bedroom is defined as any space in a conditioned (heated) area of a dwelling unit which is 70 square feet and greater in size and which is an exterior room, unless it is one of the following:

- Hall;
- Bathroom;
- Kitchen;
- Living Room (maximum of one per dwelling unit);
- Dining Room (opening off of the kitchen or living room, maximum of one per dwelling unit);
- Family Room (opening off of the kitchen or living room, maximum of one per dwelling unit);
- Breakfast Nook (opening off of the kitchen, maximum of one per dwelling unit);
- Pantry (maximum of one per dwelling unit);
- Laundry Room;
- Closet/Dressing Room opening off of the bedroom

Sewing rooms, dens, offices, studios, lofts, game rooms, and any other exterior room 70 square feet and greater in size shall be counted as bedrooms regardless of whether they are entered through a door, unless the room is otherwise exempted.

The Building Official may grant exceptions, if, in his/her discretion, a room cannot, by its design, function as a bedroom.

B. Provide effluent filter and water tight risers to grade, for filter maintenance.

C. When the quantity of sewage exceeds the amount that can be disposed in five hundred (500) Linear feet (152.4 m) of leach line, a dosing tank shall be used. Dosing tanks shall be equipped with an automatic siphon or pump which discharges that tank once every three (3) or four (4) hours. The tank shall have a capacity equal to sixty (60) to seventy-five (75) percent of the interior capacity of the pipe to be dosed at one time. Where the total length of pipe exceeds one thousand (1000) linear feet (304.8 m), the dosing tank shall be provided with two (2) siphons or pumps dosing alternately and each serving one-half (1/2) of the leach field.

D. Water softener, iron filter discharge, or swimming pool and spa filter backwash to a sewage disposal system is prohibited.

CALIFORNIA PLUMBING CODE

Capacity of Septic Tanks*

Single family dwellings - number of bedrooms	**Multiple dwelling units or apartments - one bedroom each**	**Other Uses: Maximum Fixture Units Served Per Table 4-1**	**Minimum septic tank capacity in gallons (liters)**
1 or 2		15	750 (2839)
3		20	1000 (3785)
4	2 units	25	1200 (4542)
5 or 6	3	33	1500 (5678)
	4	45	2000 (7571)
	5	55	2250 (8518)
	6	60	2500 (9464)
	7	70	2750 (10410)
	8	80	3000 (11356)
	9	90	3250 (12303)
	10	100	3500 (13249)

Extra bedroom, 150 gallons (567.8 liters) each.
Extra dwelling units over 10; 250 gallons (946.3 liters) each.
Extra fixture units over 100; 25 gallons (94.6 liters) per fixture units.

*NOTE: Septic tank sizes in this table include sludge storage capacity and the connection disposal of domestic food waste units without further volume increase.

XI. Sewage Disposal Setback Requirements

Minimum horizontal separations for subsurface sewage disposal are as follows:

TABLE 4

Minimum Horizontal Distance Required From:	Septic Tank	Disposal Field	Seepage Pit
Building of structures [1]	5 ft.	8 ft.	8 ft.
Swimming pools/spas	8 ft.	15 ft.	15 ft.
Property line adjoining private property [2]	5 ft.	5 ft.	8 ft.
Water supply wells	50 ft.	100 ft.	150 ft.
Streams (Ephemeral/Perennial)	50 ft.	50 ft.	100 ft.
Trees	10 ft.	10 ft.	10 ft.
Seepage pits or cesspools	5 ft.	5 ft.	12 ft.
Disposal field	5 ft.	8 ft. [3]	5 ft.
On-site domestic water service line	5 ft.	5 ft.	5 ft.
Distribution box	------	5 ft.	5 ft.
Pressure public water main	10 ft. [4]	10 ft. [4]	10 ft. [4]
Flood plain/flooding	5 ft	15 ft. [5]	15 ft. [5]

[1] Including porches and steps, whether covered or uncovered, breezeways, roofed porte-cocheres, roofed patios, carports, covered walks, covered driveways and similar structures or appurtenances.

[2] System may go up to edge of property line adjoining public property if no public water mains are within or anticipated within 25 feet of the property line. A statement from the Water District is required.

[3] For a 36 inch wide trench, 8 feet is required center to center. See Section VII, Trench Leach Field Design Standards.

[4] Preferably 25 feet.

[5] No part of the absorption system shall be allowed within a 100-Year Flood Plain unless the finished grade in the absorption system is 12 inches above the limit of the Flood Plain and there is a 15-foot setback from said plain to the sidewall limits of the absorption system. The flood plain is defined by the Flood Insurance Rate Map description (Firm Mapping) developed by the U.S. Dept. of Housing and Urban Development, Federal Insurance Administration.

XII. Abandoned Sewage Disposal Facilities

A. Every abandoned building (house) sewer, or part thereof, shall be plugged or capped in an approved manner within five (5) feet (1524 mm) of the property line.
B. Every cesspool, septic tank, and seepage pit which has been abandoned or has been discontinued otherwise from further use or to which no waste or soil pipe from a plumbing fixture is connected, shall have the sewage removed there from and be completely filled with the earth, sand, gravel, concrete, or other approved material.
C. Break out two minimum 12” diameter or equivalent holes at the bottom for drainage.
D. The top or arch over the cesspool, septic tank, or seepage pit shall be removed before filling and the filling shall not extend above the top of the vertical portions of the sidewalls or above the level of any outlet pipe until inspection has been called and the cesspool, septic tank, or seepage pit has been inspected. After such inspection, the cesspool, septic tank, or seepage pit shall be filled to the level of the top of the ground.
E. Fill material may be sand, pea gravel or slurry.
F. Site plan shall indicate the location of this abandoned sewage disposal facility as “No build area” unless the tank is completely removed.

DIVERTER VALVE

INSTALLATION INSTRUCTIONS

INSTALLING THE VALVE
The valve must be installed with the septic tank effluent line connected to port marked "IN". The ports marked "OUT" are to be connected to lines supplying each septic field.

The Riser Tube can be cut to any suitable length from 4" PVC or ABS pipe. The Riser should be cut and installed so the water-tight access cap is flush with the finished backfilled grade. Pipe inserts over the top of the valve body.
Use PVC or multipurpose adhesive to form a water-tight joint.

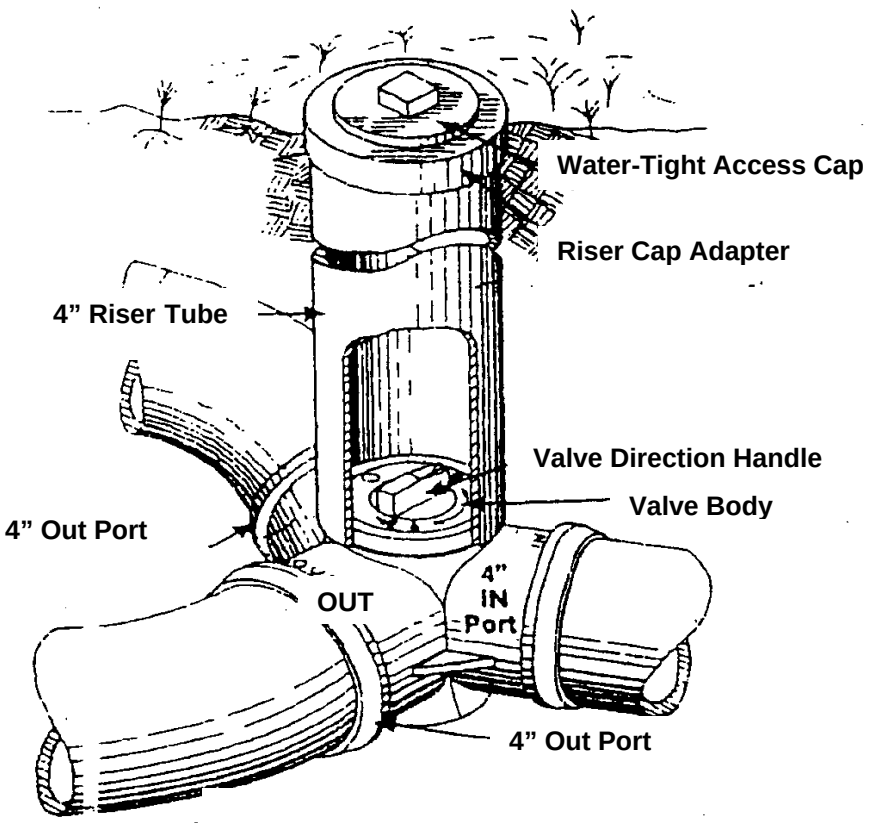

OPERATING THE VALVE

The Direction Control Handle should be rotated periodically to direct effluent to one or the other of two septic fields. After removing the screw cap at the top of Riser Tube, the valve handle can be turned with the Valve Key furnished.

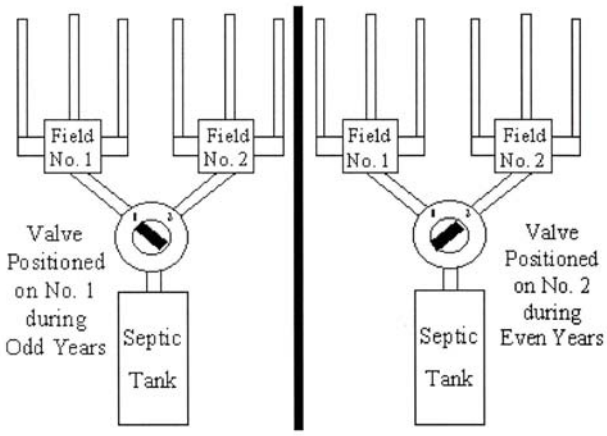

PLACEMENT OF LABEL

This label is designed to be placed in a service area, such as a laundry room or a basement area, possibly near a fuse box or circuit breakers. The label should be placed in a work area, not in an area that may become a recreation area where the homeowner may tend to remove it or cover it with some decorative wall covering. It should serve as a helpful reminder to turn the valve, thus prolonging the life of the septic system.

FILLING THE BLANKS

The label should be filled in by the installer or by the person certifying the system, so the consumer has a ready reference for turning the valve on schedule. It also provides a place for naming an agency to call for answers to any questions that may arise during the use of the system.

The label to the right is an example of the proper way to fill in the label. This way it should be the most help to the consumer.

YOUR SEWAGE DISPOSAL SYSTEM IS EQUIPPED WITH A DIVERTER VALVE.

THE VALVE SHOULD BE TURNED (Frequency) __YEARLY_____
ON/AROUND (Date) _____
TO ADD YEARS OF LIFE TO YOUR DISPOSAL SYSTEM.

For Questions Please Contact Orange County Public Works Department
County of Orange ____
300 North Flower _____
Santa Ana, CA. _____

Telephone Number 714-667-8888_____
Installing Contractor _____
Date of Installation _____

Operating the Valve
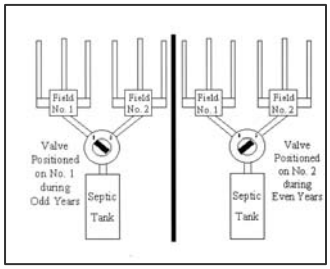
Use the handle provided by installer to turn valve. By providing long periods of rest for your drainage field. Its life will be greatly increased. Your septic tank should be serviced by a reputable contractor periodically.